EAE
LIGHTING

LED FLOODLIGHTING SOLUTIONS
SEAPORTS

LED FLOODLIGTS IN SEAPORTS

The seaports are even differentiated in trading functionality,volumes and geographically base with each other, they have quite similarity for the lighting principals. The performance of the operators, in regular daily activities and conformity of standards would only succeded if the lighting and light control systems work under described standards of level or solutions.The planning of light levels and distrubition is dependant of open area lighting criterion. However different working zones with different requirement of light for seaports brought special solution of light engineering.

LIGHTING LEVELS IN SEAPORTS

The very first precautions will be starting by securing labor safety in seaports where indicated in SIP 009 norms (See Page 5) in order to certain lighting levels and figures achieved. As assigned below, we can shortly define certain lighting levels in 2 main zones which are stacking zone and port zone in a seaport. EAE lighting solutions and project specialists will be helpful for you to avoid from any potential violation related in light according to predefined values in norms.

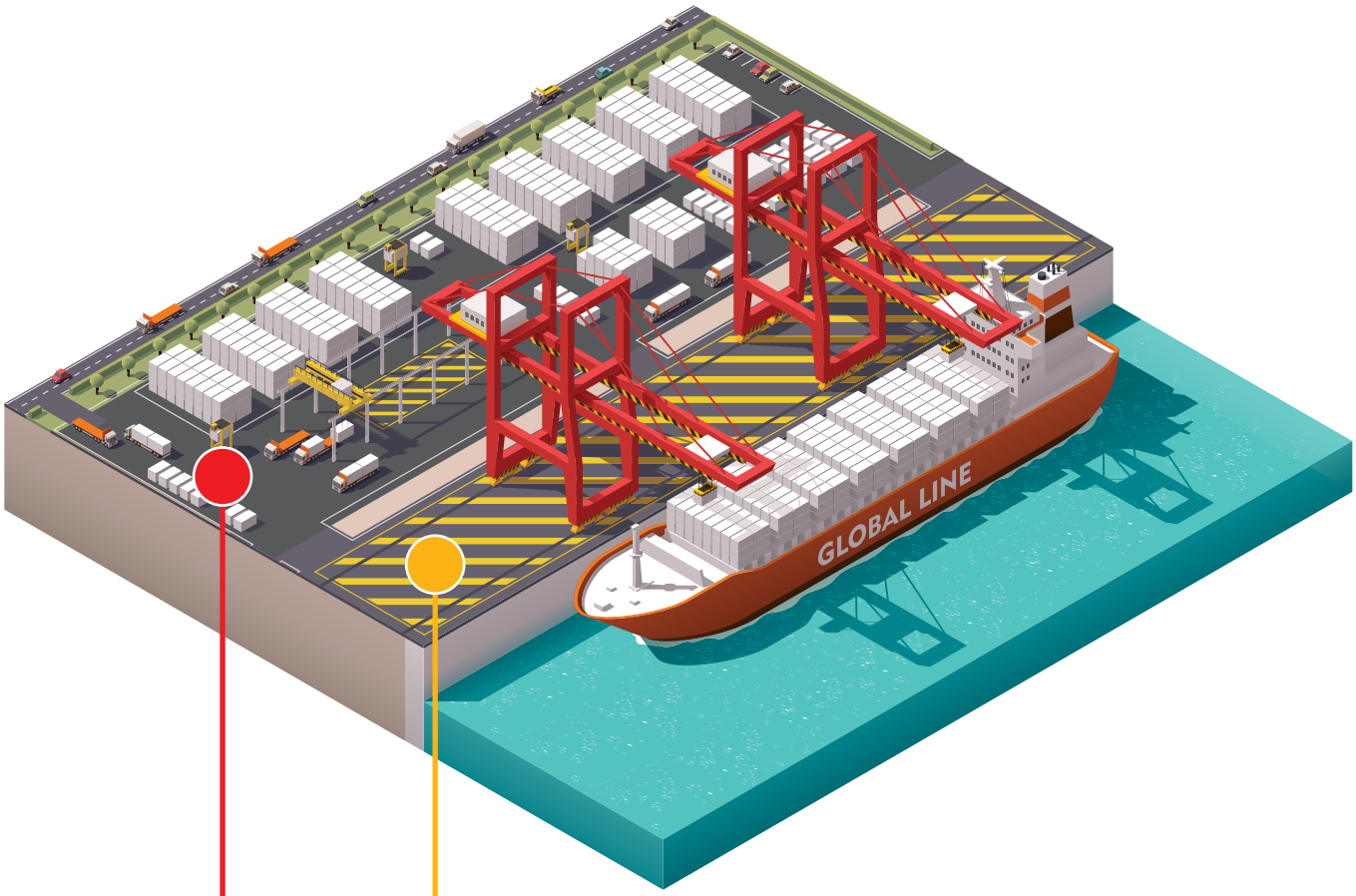

STACKING ZONE
20 Lux (Eav)

PORT ZONE
50 Lux (Eav)

SIP 009 STANDARD

Health and Safety in Seaports (UK)

Lighting Levels		Average (lux)	Minimum (lux)
Safety in Docks[2]	Operational Areas	20	5
	Acces Areas	5	1
HS(G)38[3]	Lorry park, corridors, circulation routes, where there is the movement of machines, peope & vehicles.	20	5
	Kithchens, factories, assembling components etc. Where there is work that requires perception of detail	100	50
Lighting Levels			
Merchant shipping Requirements[4]	Access, approaches and operational areas.	Non stated	5
	Transit Areas	Non Stated	1
ILO 152[5]	Operational Areas	Non stated	50
	Access Areas	Non Stated	10

[2] ACOP25, "Safety in Docks" - Docks Regulations 1988 Approved Code of Practice
[3] HS(G)38, "Lighting at Work" – Health and Safety Executive, 2002
[4] SI No.16370, Merchant Shipping "Means of Access" Regulations 1988
[5] ILO 152, "Occupational Safety and Health in Dock Work" – International Labour Organisation, 1979

In this sample, green zone is port zone and orange zone is stacking zone.

MEGALIT

For Floodlighting in Seaports and Backyard Outdoors

With Megalit family of floodlight luminaires, it's now very effective to have LED floodlight solution in accordance with CIE and SIP norms. As well as customized solutions for international seaports.

The luminaire is designed achieve great energy savings in stacked container zones, shipping zones and backyards for new projects as well as retrofit projects.

EAE welcomes customer demands for design and planning so as to optimize the quantity of Megalits and highmast poles to achieve the best lighting values together with maximised energy savings.

Technicial Specifications

Housing	: Aluminum housing
Optical	: Assymetrical reflector
Diffusor	: Tempered clear glass
Cons. Power	: 462 W
Efficacy	: 101 lm/W / 105 lm/W / 113 lm/W
Light Source	: Power LED
Input Voltage	: 220-240V AC 50/60Hz
IP Value	: IP66
Color	: SW 306G
Color Temp.	: 5000K
CRI	: >70
Applications	: Floor
Ta	: -20°C / +50°C

G·PRONA

For Floodlighting in Seaports and Backyard Outdoors

G·PRONA is specifically designed to light large areas and truck roads in seaports where very pole top installation is a must. Thanks to precise assymetric light distribution, high lumen output and very high efficacy. You can have superior energy savings than ever, especially for LED Retrofit applications.

Thanks to G·PRONA's precise thermal engineering, seaports of hot weather locations will still have a trouble free operation with pratically the same performance and what is more with negligible loss of life time. Thus we have "Reported 60.000 hrs or 106.000 hrs life time @ 50°C (Ta)".

Technicial Specifications

Housing	: Aluminum injection housing
Optical	: Assymetrical reflector
Diffusor	: Tempered clear glass
Cons. Power	: 144 W / 182 W / 313 W / 412 W
Efficacy	: 137 lm/W / 142 lm/W / 139 lm/W / 139 lm/W
Light Source	: Power LED
Input Voltage	: 220-240V AC 50/60Hz
IP Value	: IP66
Color	: SW 306G
Color Temp.	: 3000K / 4000K / 5000K / 5700K
CRI	: >70
Applications	: Floor
Ta	: -40°C / +45°C

MEGALIT Suspension Set and Dimensions

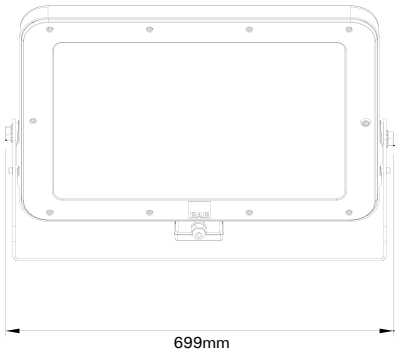

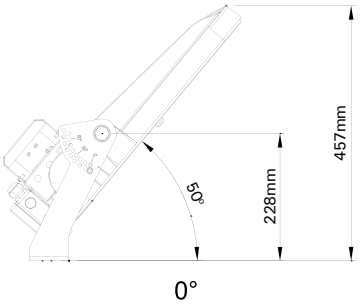

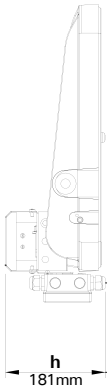

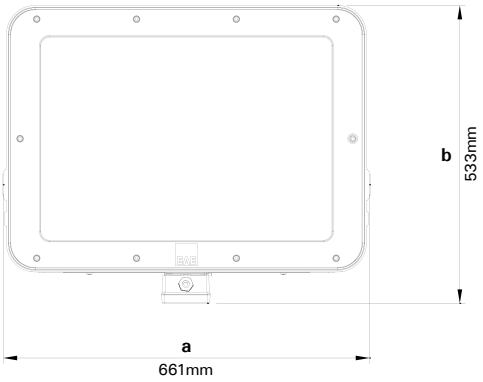

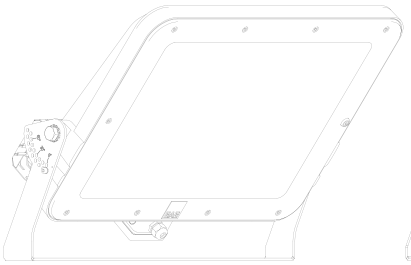

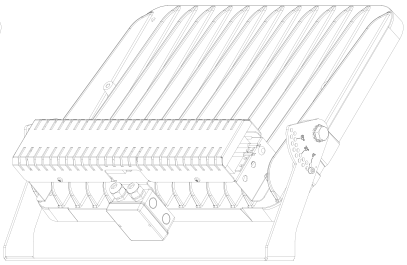

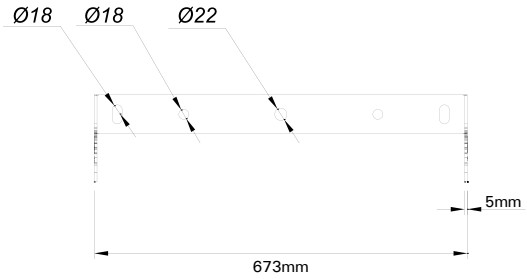

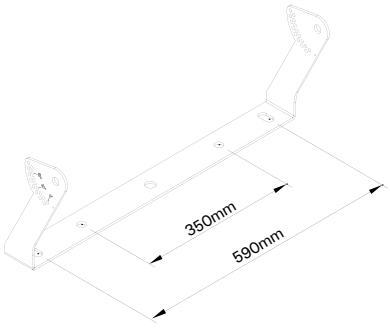

G·PRONA Suspension Set and Dimensions

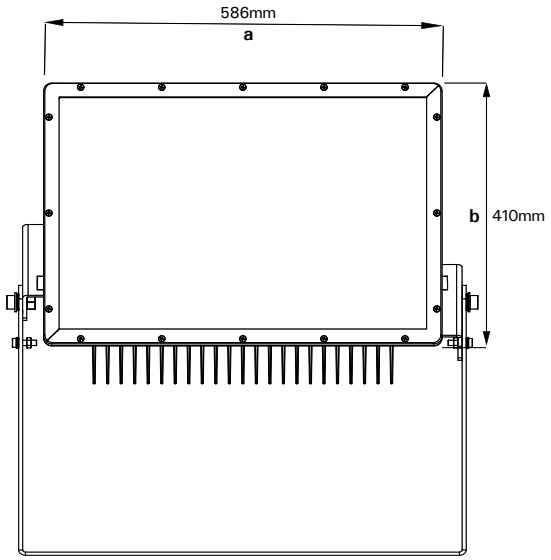

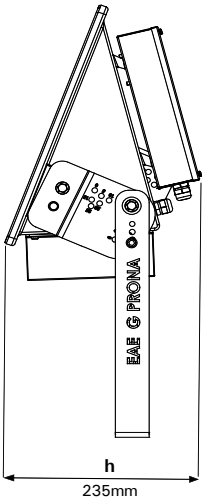

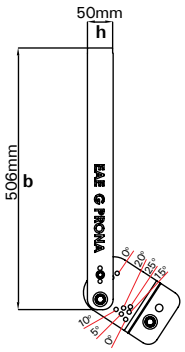

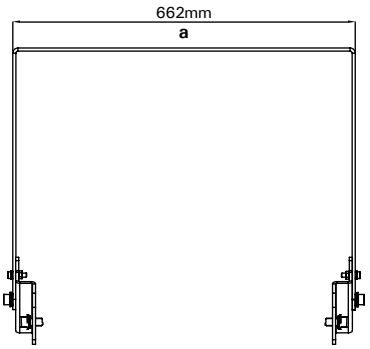

Straight Suspension Set

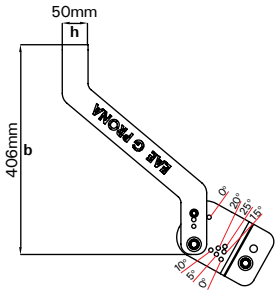

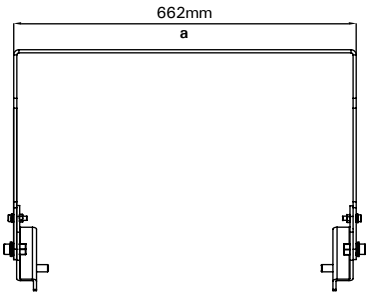

Angle Suspension Set

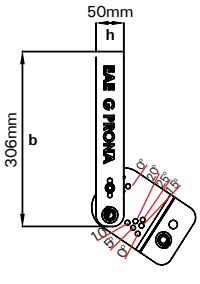

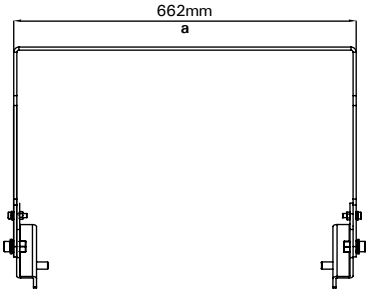

Standard Suspension Set

SPRONA Seaport

Symmetrical Projector Lighting Luminaires

Technicial Specifications

Housing	: Aluminum injection housing
Optic	: 16° / 18° / 30° / 64° / 67° and Asymmetrical reflector
Diffuser	: Tempered clear glass
Light Source	: Power LED
Cons. Power	: (X1) 410 W - 464 W / (X2) 820 W - 928 W / (X3) 1230 W - 1392 W
Lumen	
(410 W)	: (16°) 50155 lm / (18°) 47706 lm / (30°) 46578 lm / (64°) 44019 lm / (As.) 39054 lm
(464 W)	: (16°) 51630 lm / (18°) 48965 lm / (30°) 46858 lm / (67°) 45109 lm / (As.) 40321 lm
Input Voltage	: 220-240V / 50/60Hz
Color Temp.	: 4000K / 5000K / 5700K / 6500K
CRI	: >70
IP Value	: IP66
Applications	: Direct
Color	: SW 306G

SM PROJECTOR **SINGLE**

SM PROJECTOR **DUAL**

SM PROJECTOR **TRIPLE**

Technical Drawing

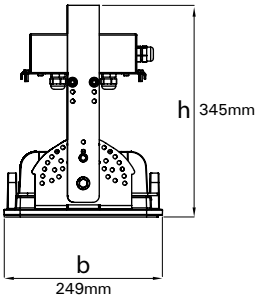

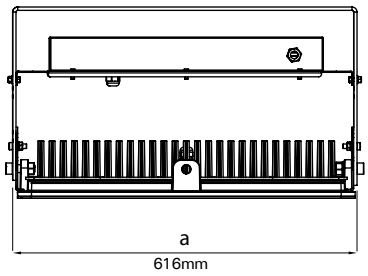

SM PROJECTOR SINGLE

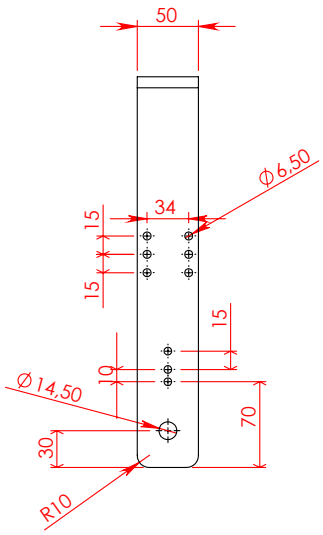

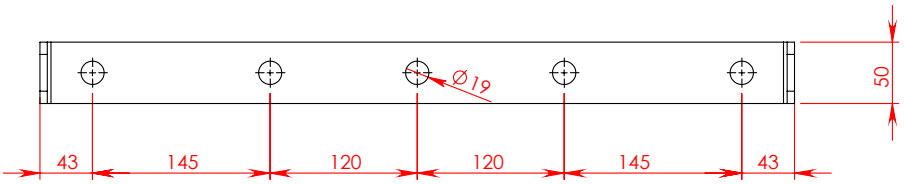

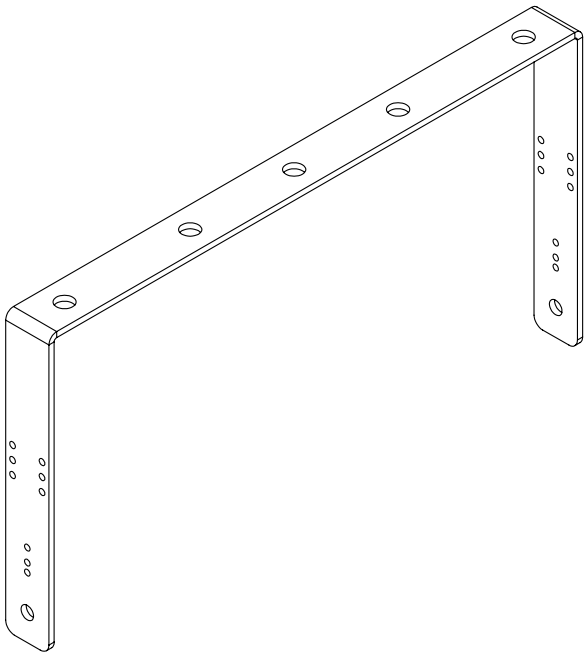

SM PROJECTOR DUAL

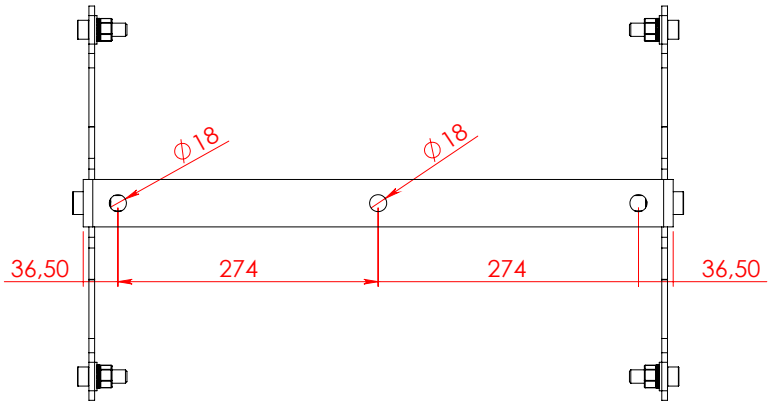

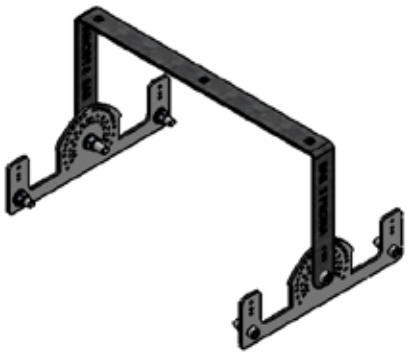

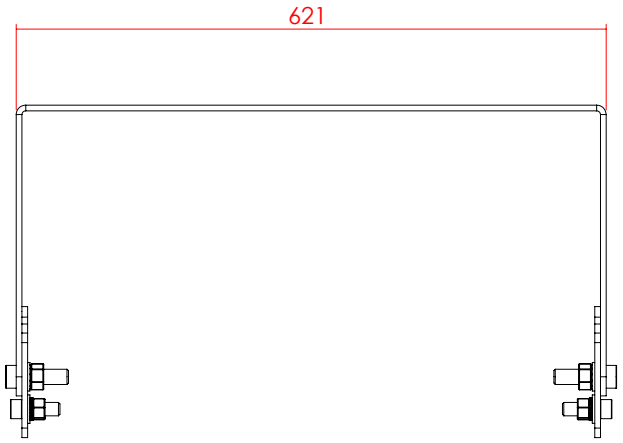

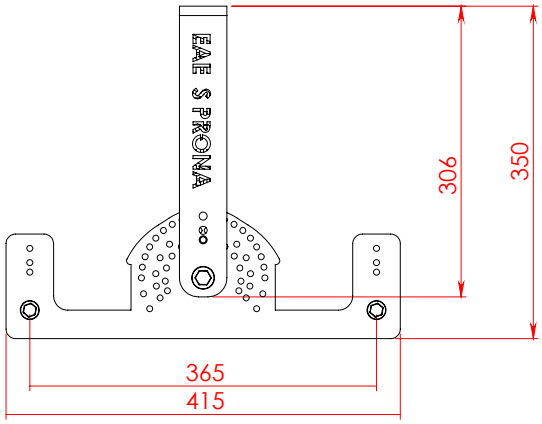

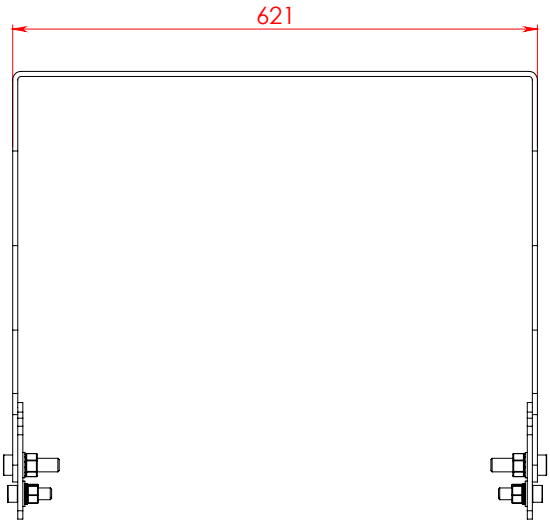

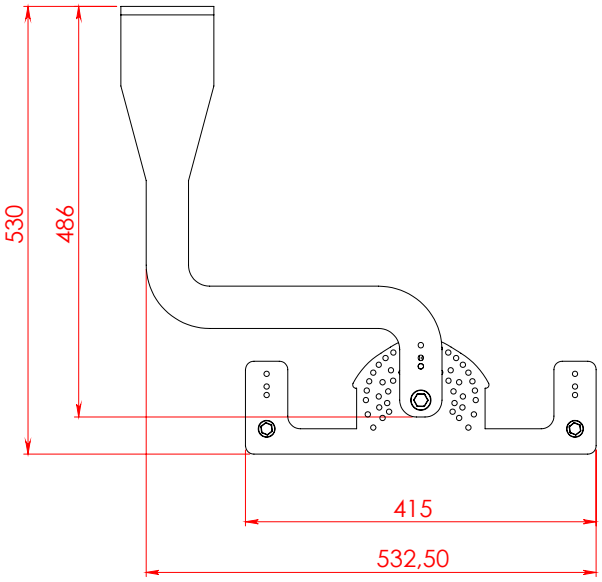

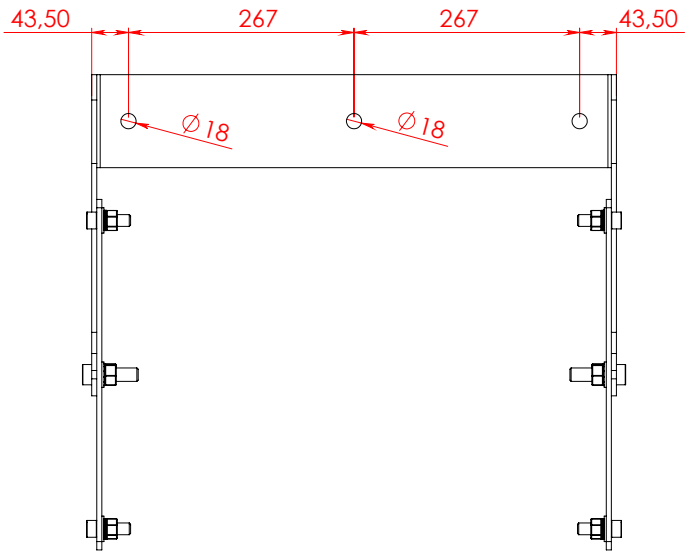

SM PROJECTOR TRIPLE

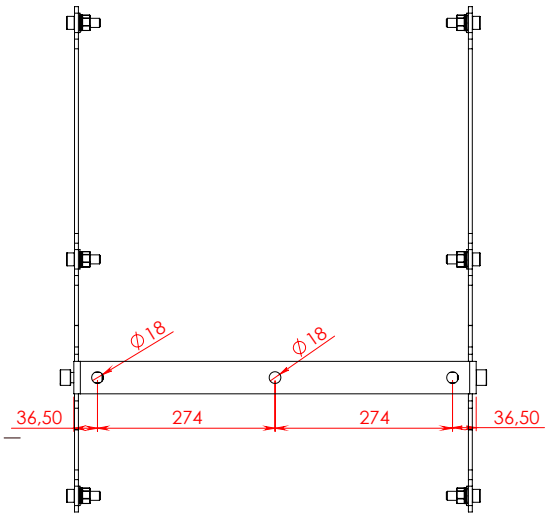

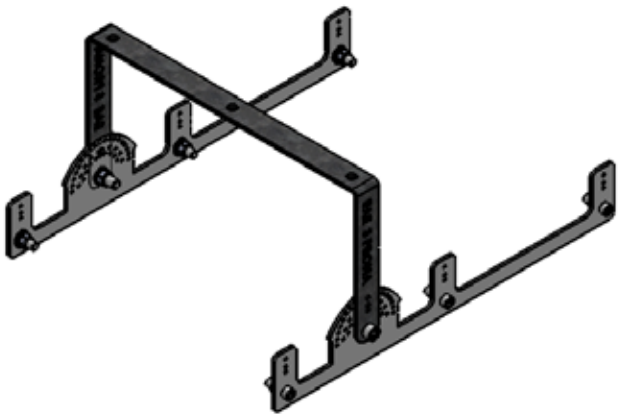

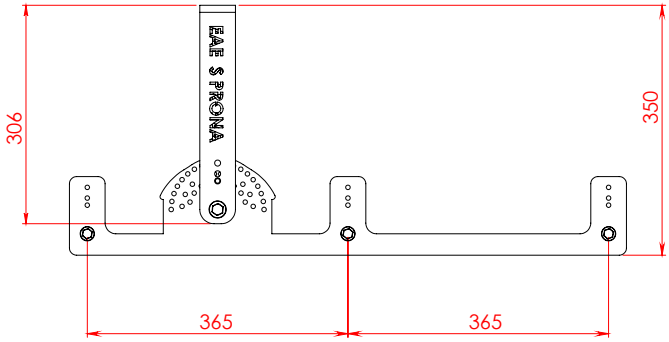

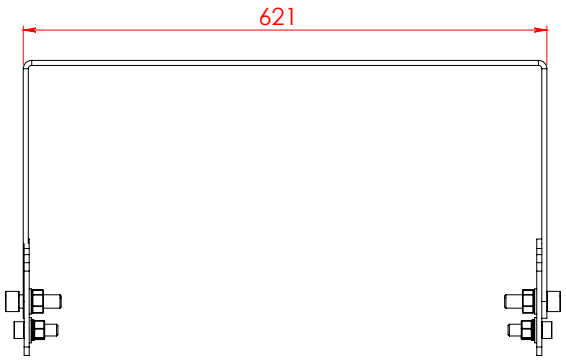

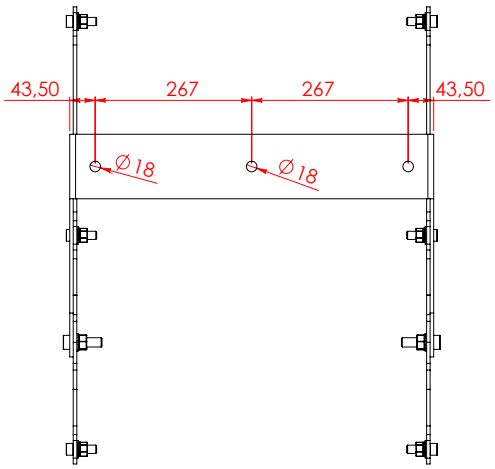

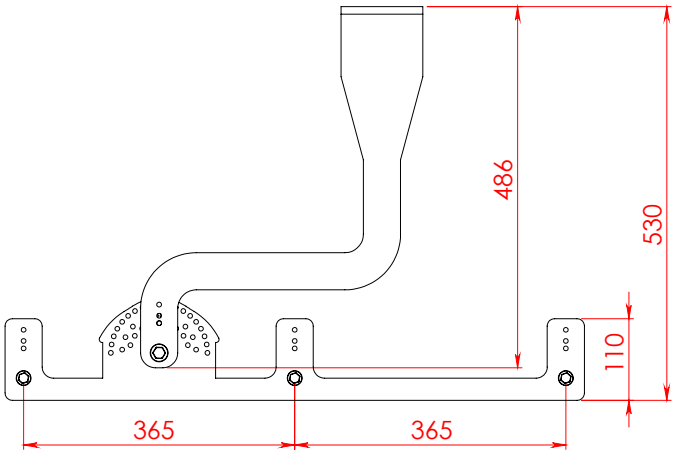

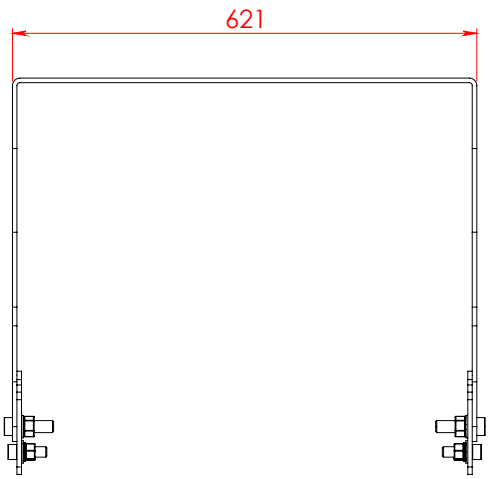

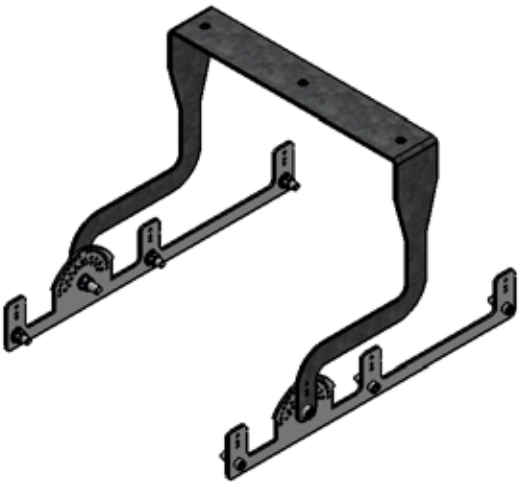

	MEGALIT 12 °	MEGALIT 18 °	MEGALIT 30 °	MEGALIT 60 °	G·PRONA ASYMMETRIC
PRODUCTS	462 W	462 W	462 W	462 W	412 W
DIMENSIONS (mm)	691 x 492 x 178	691 x 492 x 178	691 x 492 x 178	691 x 492 x 178	618 x 306 x 537
POLAR CURVES	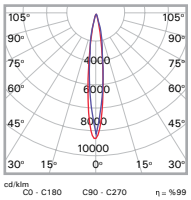	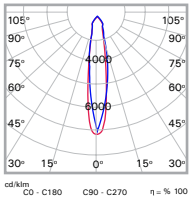	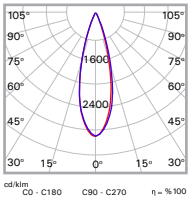	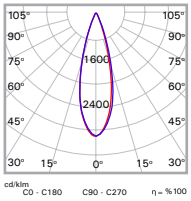	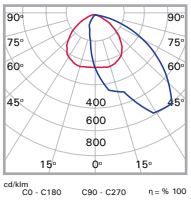
WEIGHT	24kg	24kg	24kg	24kg	20kg
NET LUMEN OUPUT	46588lm	48300lm	52336lm	51764lm	57579lm
lm/W	100.8 lm/W	104.5 lm/W	113.1 lm/W	111 lm/W	139.5 lm/W
INPUT VOLTAGE	220-240V_{AC}	220-240V_{AC}	220-240V_{AC}	220-240V_{AC}	220-240V_{AC}

GENERAL SPECIFICATIONS

Body	: Anti-Corrosive, aluminium injection body with electrostatic powder Paint
Light Distribution	: Narrow Beam(s) and asymmetric optics
Diffuser	: Tempered glass
Brackets	: Stainless steel brackets
Color Temperature (°K)	: 3000K / 4000K / 5000K / 5700K (Optional)
Input Voltage (AC)	: 220-240V AC
Input Frequency	: 50-60Hz
Power Factor	: >0,90
Color Rendering Index (CRI)	: 0,70
Working Ambient Temperature In Range	: -20°C / +50°C
LM70	: 50.000 hours @Ta=50°
Power Cord	: HARxx certified (For outdoor applications)
Impact Resistancy	: IK08
IP Rate	: IP66

Note: To choose correct luminaire article codes and project support, please consult your sales representative.

TYPICAL POLE APPLICATION

Application of Fixtures

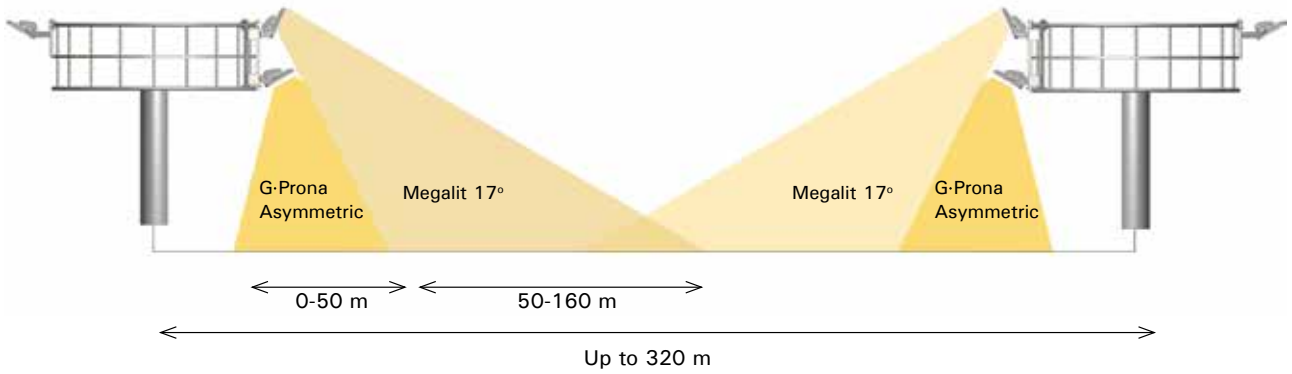

Installation Angle

Typical asymmetric and symmetric installation with short and long brackets.

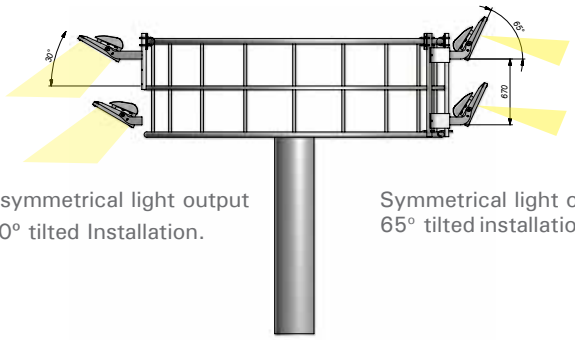

Asymmetrical light output
30° tilted Installation.

Symmetrical light output
65° tilted installation.

Installation angle of luminaire depends on the type of platforms, height of poles, lighting polar curves and the power of the luminaires. You can plan your light distribution with in decided parameters in your application.

Single & Double Installation

EAE can develop customized installation brackets for the projects. The platforms on high poles should be in hexagonal or octagonal shape. Round type of platforms makes installation more difficult.

Brackets for single projector. Brackets for double projectors.

The brackets can vary according to your target light levels, type of poles and luminaire quantities on a single pole.

Close View of Insallation Parts

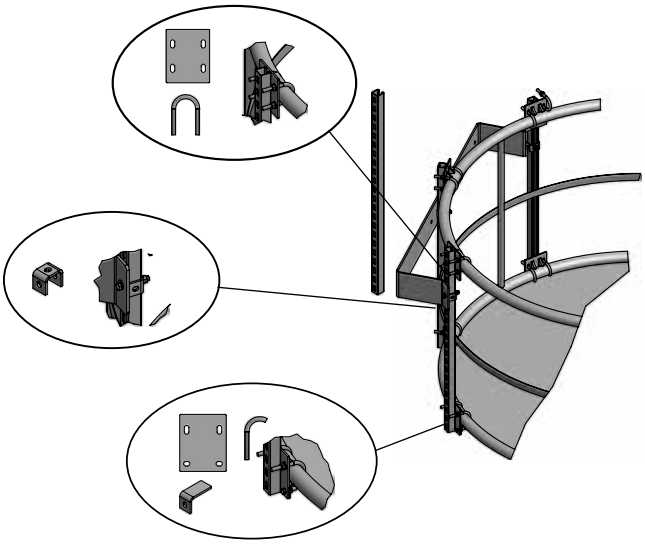

SEAPORT LIGHT CONTROL

Seaport Outdoor RF Lighting Control, by Authorized People

SLC Seaport Light Control has been designed to remotely monitor and control exterior lighting.The system can basically monitor,report and control the state of each and every luminaire.Thus sustainable operation is achieved. Moreover, thanks to a cloud based software may be accessed by authorised people, from anywhere and with any device. Power consumption calculations maybe obtained as reports and desired controls can be realized.

As the system can operate on a RTC controlled standalone basis, even if communication is interrupted for any reason, it will continue to automatically execute the latest daily scenario, until the interruption is corrected.

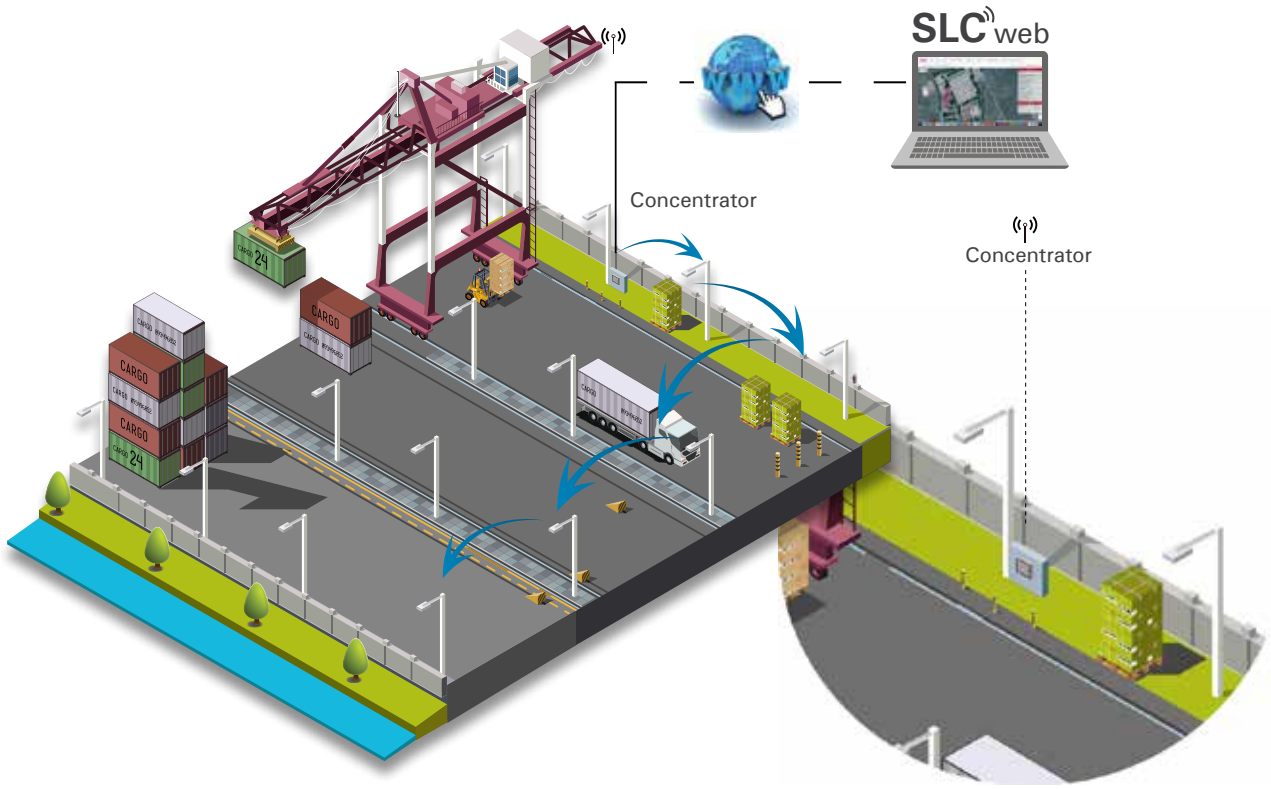

Concentrator Ethernet

Concentrator GPRS

Lighting Luminaires
(With RF Module)

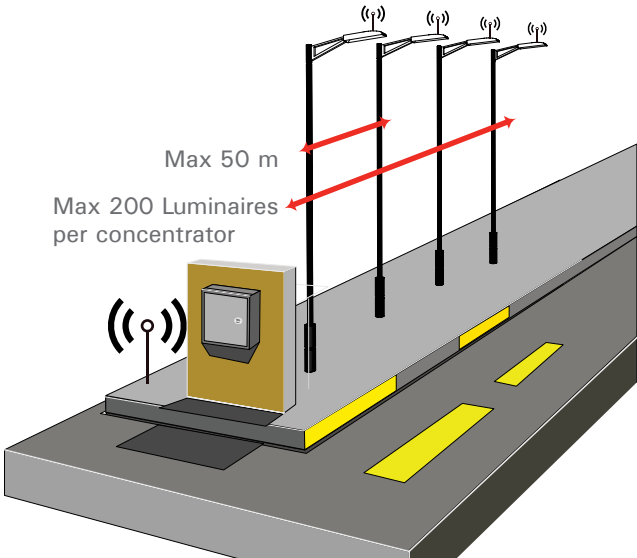

PRODUCTS

- Concentrator Ethernet
- Concentrator GPRS
- SLC License 200-1000-5000
- RF Module (Inside of the Luminaire)

See on web

GENERAL SPECIFICATIONS

Flexible Group Formation

Luminaires may be grouped freely according to user's convecience even if they are members of different power circuitry.

ON/OFF & DIM Control

Luminaire groups may be dimmed from 1 to %100 dim levels. Or grouped luminaires may be controlled as on/off.

Reporting

Detailed fault status information (Lamp failure, Overheating, Driver failure, etc.) on luminaire basis are reported and visual warnings are given through the user interface instantly.

Time Control

Dimming & ON/OFF controls may easily be scheduled.

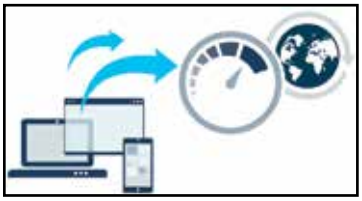

Power Consumption Reporting

Power consumption is calculated by the usage time multiplied by the rated power of the luminaire, which gives a fairly good indication of consumed power.

RETURN OF INVESTMENT

FOR A TYPICAL APPLICATION

	CONVENTIONAL APPLICATION	EAE LED APPLICATION	
	1000 W SON	G·PRONA ASYMMETRIC 413 W	MEGALIT 17° 462 W
		+	
Lamp Life Time (Hours)	14.000	60.000	50.000
TECHNICAL COMPARISON			
Luminaire (Pcs)	242	193	92
Bulb Qty (Pcs)	242	-	-
Luminaire Rated Power (W)	1100	412	462
Lighting Control Savings (%)	-	%40	%10
Total Power	279,5 kW	122,0 kW 86 kW (With Lighting Control)	
OPERATIONAL COSTS			
Cost of Lamp Change Workmanship ($)	100.00	-	-
Annual Cost of Lamp Change ($)	13.699.73	-	-
Work Hours Daily (Hours/Day)	13	13	13
Annual Work Days	365	365	365
Annual Work Hours (Hours/Year)	4745	4745	4745
Energy Unit Cost ($/kWh)	0,07	0,07	0,07
System Operation Cost	111,181 $	40.528,94 $ 28.550,00 (With Lighting Control)	
Energy Saving		% 58 % 71 (With Lighting Control)	
NEW PROJECT RETURN OF INVESTMENT		1 Years 1.6 Years (With Lighting Control)	
RETROFIT PROJECT RETURN OF INVESTMENT		3.5 Years 3.8 Years (With Lighting Control)	

SIX REASONS

FOR EAE TOTAL SOLUTIONS

BEST EFFICACY RATES

G·Prona and Megalit floodlights have great energy efficiency. (Up to 148 lm/w)

PROJECT SUPPORT

EAE lighting specialists are ready to help for your new and retrofit projects. Project support by EAE brings less effort to light planner, consulting offices and all related companies in light.

CONTROLABILITY

EAE is a producer of Lighting Control equipment in wireless or wired systems.Controlability is one of the key point to save more energy, to go green.

COMPATIBILITY

EAE lighting solutions are compatible in accordance to light levels indicated in existing norms at seaport's health and safety guidance.

ULTRA-LOW MAINTENANCE

The products we have manifactured serves ultra-low maintenance cost because of our design and trackable test processes.

TOTAL SOLUTION PROVIDE

EAE is able to offer total solution in one package by quoting floodlights, lighting control systems, high bay luminaires and crane lights.

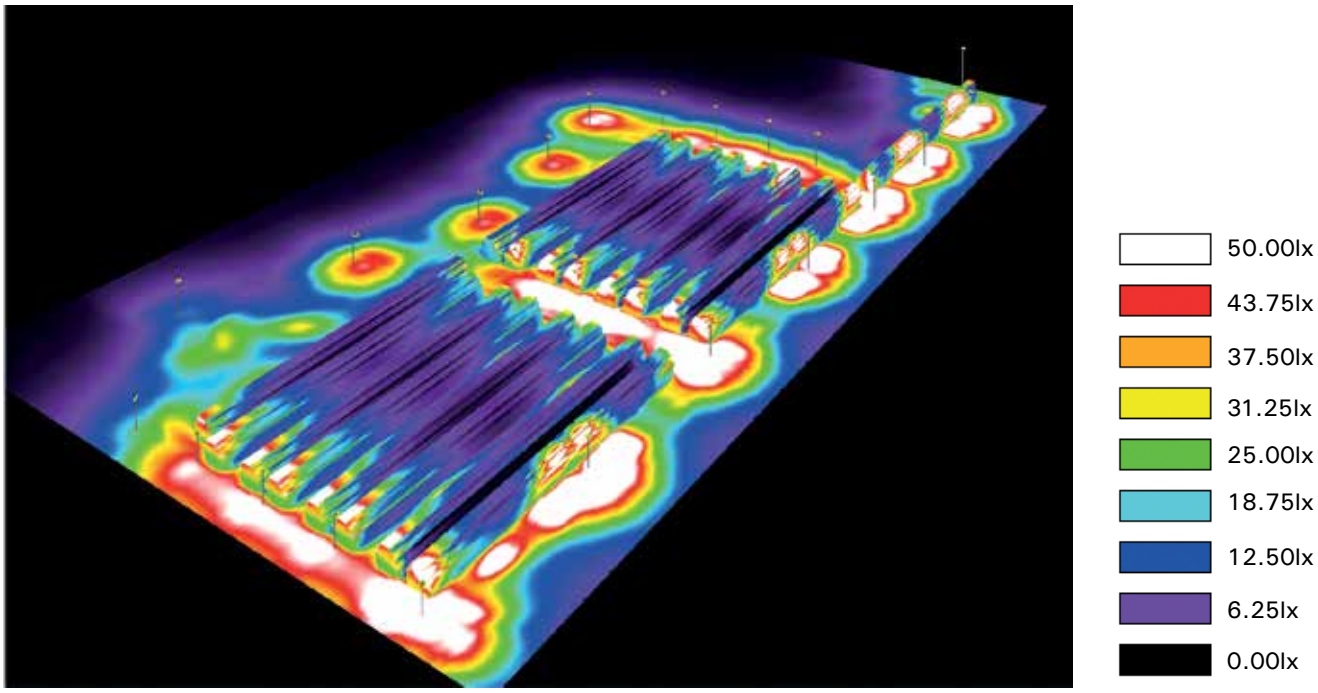

Lighting Levels

Shipyards-Warehouses with in Seaports

High Bay Warehouse Lighting and Lighting Control Systems in Shipyards & Seaports

Both shipbuilding shipyards or warehouses around seaports requires high bay ceiling lighting solutions. Today, LED high bay lightings are became more compulsory than yesterday because of suffering higher electricity costs. As EAE, SRound brings the best energy saving LED High Bay Lighting Solutions ever.You can find more details in www.sround.net website.

SRound

Led High Bay Lightings in High Efficiency

SRound is the best variated in optics and enegy efficient lighting fixture for High Bay applications. We can offer greatest solutions up to 45 meters height of ceilings by using SRound. You will have the best save with SRound up to **162 lm/W** performance as how you have planned before.

Lowbay Optics (Wide Beam)	**SRD 068U 40FS24 LB 10K5 V.2.88 PEND** 9679 lm / 67.9 W 143 lm/W	**SRD 137U 40FS24 LB 18K0 V.2.88 PEND** 18217.2 lm / 136.5 W 133.4 lm/W
Arena Optics (Medium Beam)	**SRD 068U 40FS24 AR 10K5 V.2.88 PEND** 9805.1 lm / 67.8 W 144.4 lm/W	**SRD 137U 40FS24 AR 18K0 V.2.88 PEND** 18429.7 lm / 136.6 W 134.8 lm/W

Double Suspension Set

Single Point Suspension Set

Busbar Suspension Set

Cable Suspension Set

KNX Lighting Control for Indoor Applications

EAE is a member of KNX based equipment manifacturer in list. It will be the first choice to get benefits of choosing KINEXA family of KNX equipment produced by EAE. Here you can find some of our KNX equipments as illustrated below. Gateways, Relay Units, Interface Units, Rooter, Sensors and HYPERION II UI software. The control and management will be in your hands and desktop anymore.

EAE / KNX, KINEXA + HYPERION II

Models :

KNX DALI GATEWAY

KNX RELAY UNİT

KNX UNIVERSAL INTERFACE

KNX IP ROUTER

KNX PRESENCE SENSOR

KNX MOTION SENSOR

KINEXA | Building Management System

ARCHITECTURAL VISUALS

The visuals intended for monitoring and control are automatically developed from architectural CAD project file. It is possible to navigate on the visuals by means of “maximize-minimize” and “scroll right-left” functions.

WEB BASED

HYPERION II is a web server ratherthan PC software. For this reason it can be fully functional on any device in possession of a web browser. There is no limitation on the number of the devices that could be connected to the server.

DALI CONTROL

KNX / DALI Gateways can control addressable DALI compatible devices, manage illumination levels and relay luminaire error information to the center in a detailed format.

USER AUTHORIZATION

Authorizations for “Commissioning”, “Control” and “Monitoring” among the users registered in the system are possible. Thanks to this functionality, it is possible to assign different access levels to different users to ensure system security.

TIME MANAGEMENT/ SCHEDULING

Scheduled controls are conducte over a calendar sensitive days of the week as well as the special days.

ALARMS AND WARNINGS

Errors and failures (about ballasts, bulbs, dimmer, etc.) are displayed by using different colors and warnings on the architectural visuals. The warnings can be relayed to the registered users in e-mail and SMS format. Each and every alarm and warning is recorded.

EMERGENCY LIGHTING REPORTING

Battery status checks and functional tests are conducted and reported based on an automatic testing calendar without any manual intervention from maintenance staff.

CURTAIN CONTROL

Similar to the lighting fixtures, curtains and blinds can also be enabled and controlled over visuals as related data is read from architectural CAD project.

Crane Lighting

Seaport Crane Lighting

Canopy Lighting

Cranes are used to carry containers in most seaports. Existing cranes can get the worst figures as electricity costs and efficiency of light. Harsh enviroment in a seaport could be a disaster for increased operational costs. EAE uses Prolit for under canopy applications at RTG and STS zones. Prolit will provide trouble-free operation under the crane canopies.

Lighting Over the Top of Crane

Over the crane pathways and catwalk zones we offer T-Bar LED fixtures in quite slim form with $220/240V_{AC}$ or $24/48V_{DC}$ power supplies.

Peripheral Lighting Around Crane

At the sides of cranes, GARLED is best for the purpose. GARLED comes with $220/240V_{AC}$ or $24V_{DC}$ supply voltage options.

	PROLIT V.2	T-BAR	GARLED
Technical Specifications			
Power Consumption	132 W / 176 W / 195 W	10 W	16 W / 31 W / 60 W / 15 W 30 W / 56 W
Supply Voltage	220-240V AC 50/60 Hz	100-240V AC 50/60Hz	220-240V AC 50/60Hz
IP Class	IP66	IP66	IP66

Crane Lighting

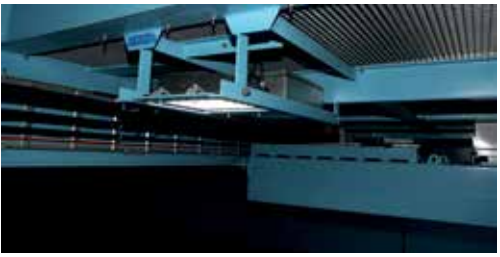

Seaport and Crane Lightings

You can besure of satisfactory “Return of Investment” ROI period by using EAE LED Lighting solution and SLC Seaport RF Lighting Control Systems together. Please consult your EAE representatives to concretely see how this happen for your particular application before you buy it. EAE welcomes lighting planning and project development, free of charge.

Asyaport
Tekirdağ / Turkey
(With the courtesy of ASYAPORT)

asyaport
2H
asyaport

asyaport
asyaport

Asyaport
Tekirdağ / Turkey
(With the courtesy of ASYAPORT)

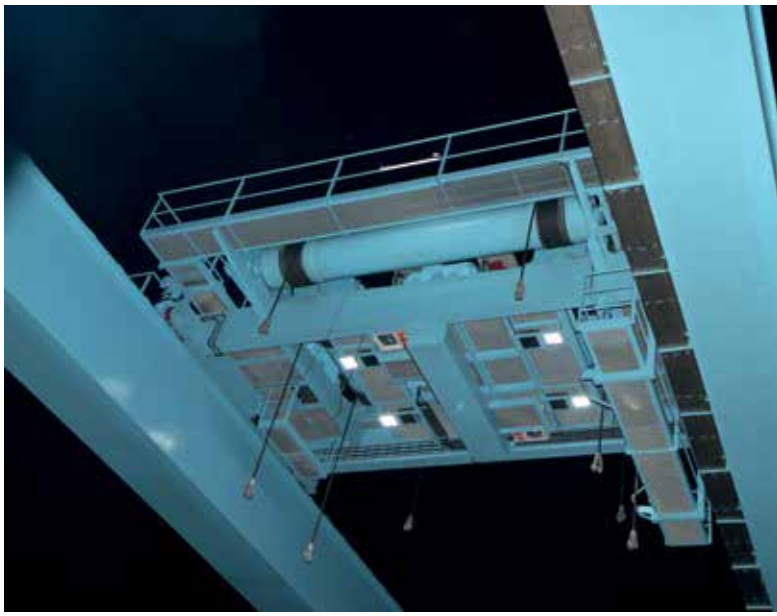

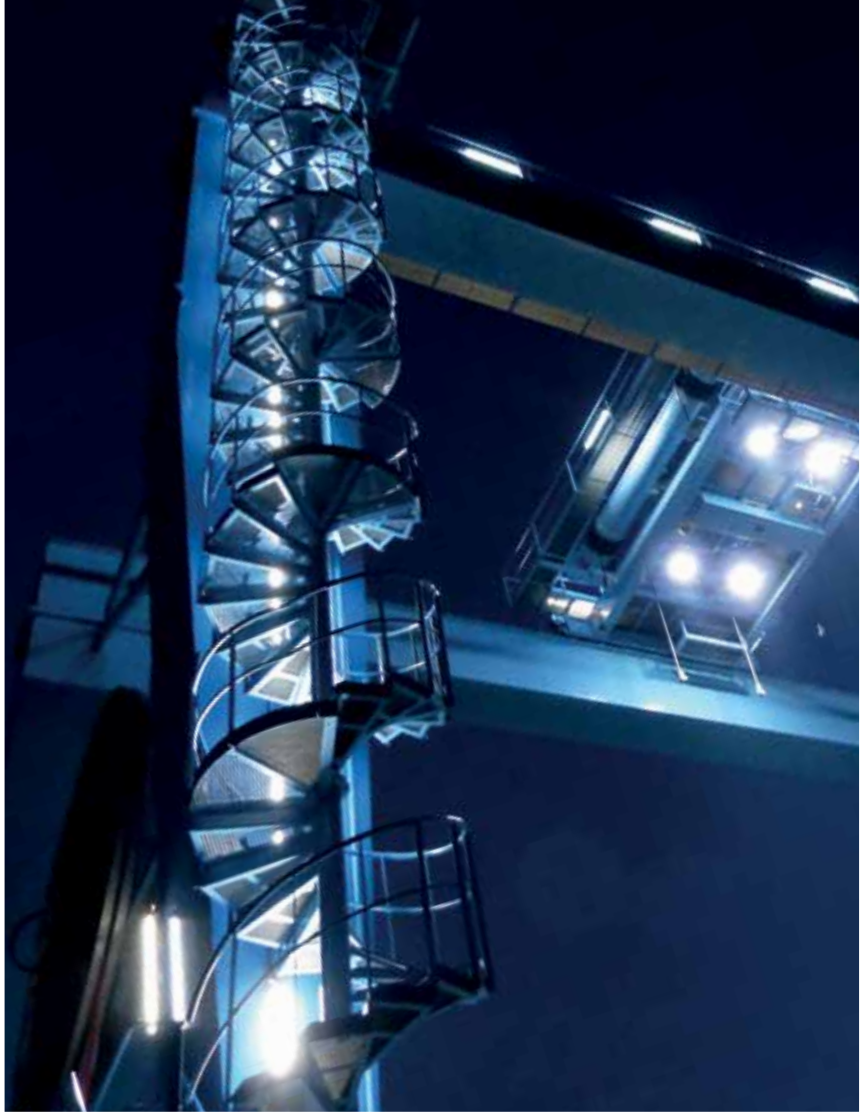

Europoort
Rotterdam / Holland
(With the courtesy of Europoort)

In This Project

PROLIT, GARLED and T-BAR are used.

-Under Crane Canopy (Prolit)
-Crane Sides (Garled)
-On the Crane (T-Bar)

EAE LIGHTING-Brochure Seaports-Update: 16.03.2018
EAE is provided with the right to perform changes deemed necessary without notifying in advance. Please contact us for further information about products and details partaking in catalogue.

EAE LIGHTING Inc.
Ikitelli Organize Sanayi Bolgesi
Eski Turgut Ozal Caddesi No: 20
Basaksehir / ISTANBUL - TURKEY
Tel : +90 212 413 21 00 (pbx)
Faks : +90 212 549 37 90
www.eaeaydinlatma.com.tr

Available on the App Store

Google Play

/eaegroup /eaegroup /eaegroup /eaecorporate /eaegroup /eaegroup

engineering the light