FLEXBAR

38 W/10m 8 Module LED Luminaire
Flexible Solution For Linear Lighting

Order Code	: 3075863
Product Code	: FLX 038G 40SD28 0K5 10M8

Product Data

Standard Features

Housing	: PC Housing
Diffuser	: Transparent diffuser
IP Grade	: IP20
Installation	: Cove lighting / Surface mounted
Light Source	: Mid Power LED

Optical & Electrical Features

Power Consumption	: 38 W/m
Final Luminous Flux	: 4638.5 lm/m
Efficacy	: 120.4 lm/W
Input Voltage	: 220-240 V AC
Frequency	: 24V DC
Power Factor	: > 0,9
Drive Current	: 1600 mA
Correlated Color Temperature	: 4000K
Color Rendering Index	: >80

Other Features & Conditions

Operating Temperature Range	: -10 °C/+40 °C
Impact Resistance	: IK02
Led Life Time - L70	: > 52.000 hours @ Ta=40 °C

Photometric Curve

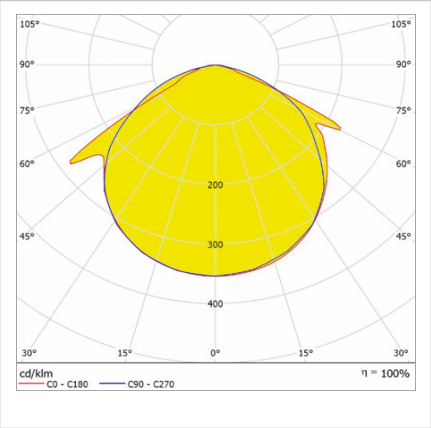

Optional Features

Correlated Color Temperatures	: 2700K, 3000K
Emergency Kit Options	: No
DALI Option	: Yes
Lumen Package (lm)	: 12732, 7880, 6882

FLEXBAR

38 W/10m 8 Module LED Luminaire Flexible Solution For Linear Lighting

3075863 FLX 038G 40SD28 0K5 10M8

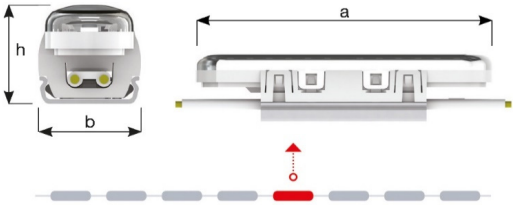

Module Dimensions (mm)

	a	b	h
Standard	92	23	22

Weight (gr)

Standard	866

Opal Diffuser (Optional)

*Luminaire has halogen-free wiring.

Driver Dimensions (mm)

Dimensions (mm)				Weight (kg)
	a	b	h	gr
35 W TRIDONIC	220	40	21	230
30 W OSRAM	213	40	22	330
60 W TRIDONIC	250	40	21	280
75 W DALI OSRAM	220	46	43	350
80 W OSRAM	250	50	34	850
96 W TRIDONIC	300	40	21	340
100 W DALI TRIDONIC	295	43	30	254
120 W OSRAM	250	60	39	1100
150 W TRIDONIC DALI	325	43	30	300
180 W TRIDONIC	250	64	31	850

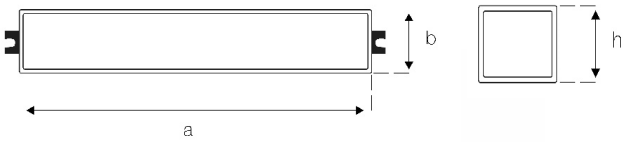

Advantages

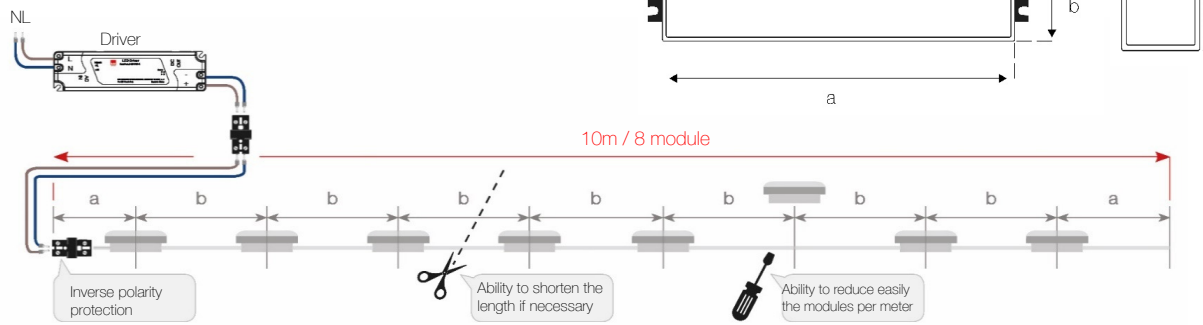

10m / 8 module

a: 62 mm
b: 125 mm

* Unit of measure between modules is mm.

*Ability to place 4, 5, 6, 7, 8, 9 modules per 1 m cable.

- EAE Aydınlatma reserves the right to make any change without prior notice.

engineering the light

EAE Aydınlatma A.Ş.
İkitelli Organize Sanayi Bölgesi Eski Turgut Özal Caddesi No:20 Başakşehir / İSTANBUL-TURKEY **Phone:** +90 212 413 21 00 (pbx) **Fax:** +90 212 549 37 90
www.eaeaydinlatma.com.tr

Revision date: 11.01.2018