MODILED HB II
ARENA

Pendant 38 W LED Lighting Luminaire

Order Code	: 3076971
Product Code	: MHB 035S 40AR00 LLL 144I3

Product Data

Standard Features

Housing	: Aluminium extrusion housing and cover
Diffuser	: Glare controlled opal diffuser
Optic	: 60° Lens
IP Grade	: IP20
Installation	: Pendant
Light Source	: Mid Power LED

Optical & Electrical Features

Power Consumption	: 37.6 W
Final Luminous Flux	: 4893.5 lm
Efficacy	: 130 lm/W
Input Voltage	: 220-240 V AC
Frequency	: 50-60 Hz
Power Factor	: > 0,9
Surge Transient Protection	: 1 kV
Drive Current	: 300 mA
Correlated Color Temperature	: 4000K
Color Rendering Index	: >80

Other Features & Conditions

Operating Temperature Range	: -20 °C/+40 °C
Operating Temperature Range With Emergency Kit	: +5 °C/+35 °C
Impact Resistance	: IK02
Led Life Time - L70	: > 60.000 hours @ Ta=40 °C

Photometric Curve

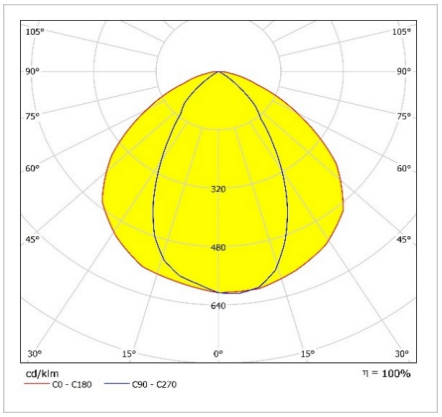

Optional Features

Correlated Color Temperatures	: 3000K, 6500K
Emergency Kit Options	: 1, 3 hours
DALI Option	: Yes

MODILED HB II ARENA

Pendant 38 W LED Lighting Luminaire

3076971 MHB 035S 40AR00 LLL 144I3

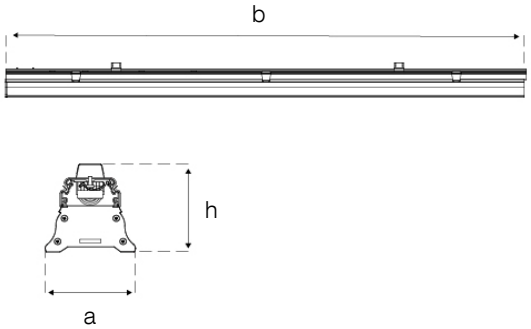

Dimension (mm)

	a	b	h
Standard	102	1440	90

Weight (kg)

Standard	4,5
With Emergency Kit (1 hr.)	5,3
With Emergency Kit (3 hrs.)	5,6

Suspension Set

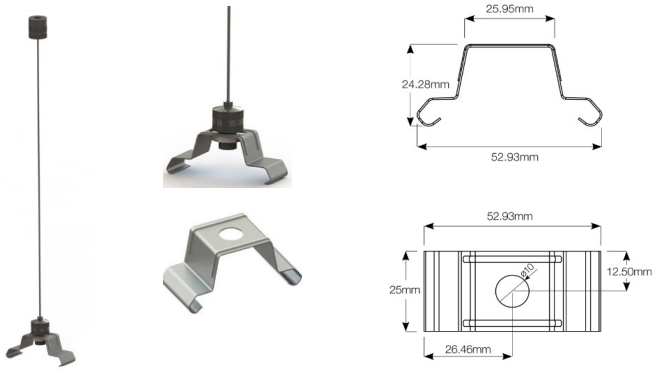

- EAE Aydınlatma reserves the right to make any change without prior notice.

engineering the light

EAE Aydınlatma A.Ş.
İkitelli Organize Sanayi Bölgesi Eski Turgut Özal Caddesi No:20 Başakşehir / İSTANBUL-TURKEY **Phone:** +90 212 413 21 00 (pbx) **Fax:** +90 212 549 37 90
www.eaeaydinlatma.com.tr

Revizyon tarihi: 11.01.2018