# MODILED HB II
## LOWBAY

Pendant 48 W LED Lighting Luminaire

| | |
|---|---|
| Order Code | : 3096473 |
| Product Code | : MHB 050S 40LB00 LLL 144I3 |

## Product Data

### Standard Features

| | |
|---|---|
| Housing | : Aluminium extrusion housing and cover |
| Diffuser | : Glare controlled opal diffuser |
| Optic | : 90° Lens |
| IP Grade | : IP20 |
| Installation | : Pendant |
| Light Source | : Mid Power LED |

### Optical & Electrical Features

| | |
|---|---|
| Power Consumption | : 48.2 W |
| Final Luminous Flux | : 6834.1 lm |
| Efficacy | : 142 lm/W |
| Input Voltage | : 220-240 V AC |
| Frequency | : 50-60 Hz |
| Power Factor | : > 0,9 |
| Surge Transient Protection | : 1 kV |
| Drive Current | : 420 mA |
| Correlated Color Temperature | : 4000K |
| Color Rendering Index | : >80 |

### Other Features & Conditions

| | |
|---|---|
| Operating Temperature Range | : -20 °C/+40 °C |
| Operating Temperature Range With Emergency Kit | : +5 °C/+35 °C |
| Impact Resistance | : IK02 |
| Led Life Time - L70 | : > 60.000 hours @ Ta=40 °C |

## Photometric Curve

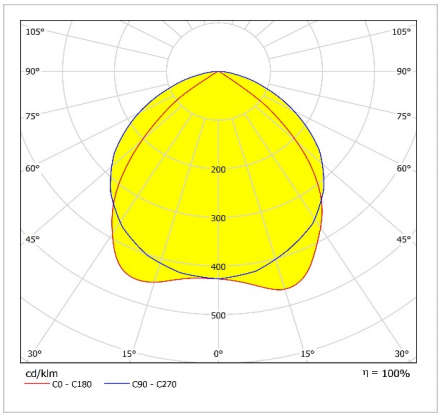


### Optional Features

| | |
|---|---|
| Correlated Color Temperatures | : 3000K, 6500K |
| Emergency Kit Options | : 1, 3 hours |
| DALI Option | : Yes |

# MODILED HB II LOWBAY

## Pendant 48 W LED Lighting Luminaire

**3096473** MHB 050S 40LB00 LLL 144I3

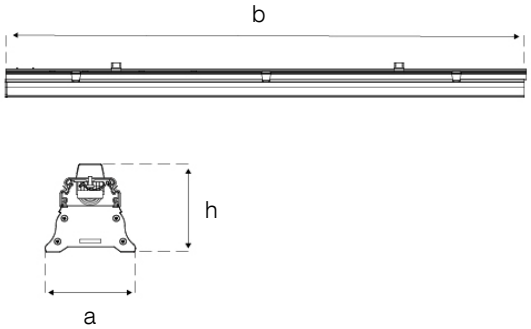


### Dimension (mm)

| | a | b | h |
|---|---|---|---|
| Standard | 102 | 1440 | 90 |

### Weight (kg)

| | |
|---|---|
| Standard | 4,5 |
| With Emergency Kit (1 hr.) | 5,3 |
| With Emergency Kit (3 hrs.) | 5,6 |

## Suspension Set

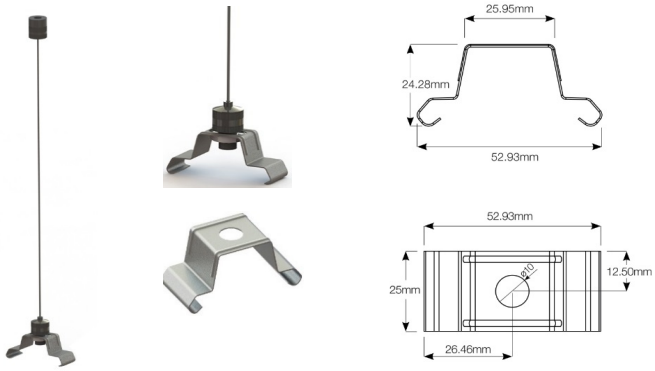


- EAE Aydınlatma reserves the right to make any change without prior notice.


engineering the light

**EAE Aydınlatma A.Ş.**
İkitelli Organize Sanayi Bölgesi Eski Turgut Özal Caddesi No:20 Başakşehir / İSTANBUL-TURKEY **Phone:** +90 212 413 21 00 (pbx) **Fax:** +90 212 549 37 90
**www.eaeaydinlatma.com.tr**


Revizyon tarihi: 11.01.2018